Installation & Maintenance Manual

SOL-G2 LED Luminaire Ultra-versatile High Output Lighting

IMPORTANT SAFETY INSTRUCTIONS ***Mesures de Sécurité à Respecter***

This product must be installed in accordance with the applicable installation code by a person familiar with the construction and operation of the product and the hazards involved.

Ce produit doit être installé selon le code d'installation pertinent, par une personne qui connaît bien le produit et son fonctionnement ainsi que les risques inhérents.

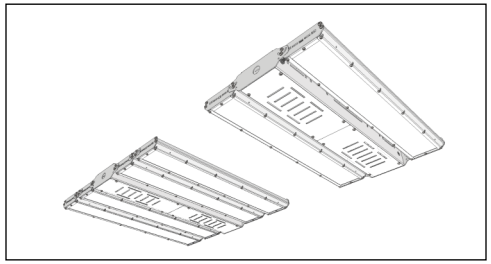

C US
264579

DANGER
High Voltage.
Turn off power before servicing.

Brief Introduction

Ultra-versatile high output lighting luminaire to be installed via Suspension, Surface, or Pendant Stem.

Surface/Pendant LED Luminaire—Certified to Canada/US Standards
CSA C22.2 No. 250.0-18
UL1598, 4th Edition

Suitable for wet locations. *Convient aux emplacements mouilles.*

Covered ceiling mount only. *Installation sur plafond couvert seulement.*

Pendant mount this luminaire using only the mounting hardware supplied by the manufacturer or similar. *Installer ce luminaire comme lustre en utilisant seulement la quincaillerie fournie par le manufacturier ou une quincaillerie similaire.*

Min 90°C supply conductors. *Les fils d'alimentation doivent convenir pour 90°C.*

Caution—risk of shock. *Attention—risque de choc.*

Remove luminaire for maintenance. *Enleve luminaire pour l'entretien.*

Not for use in dwellings. *Ne pas utiliser dans les logements.*

Always keep protective metal plate and screws in place. Remove only when necessary. *Garder toujours la plaque de protection en métal et les vis en place. Retirez uniquement si nécessaire.*

(*If applicable*) This luminaire is provided with a factory installed emergency lighting battery pack. *Ce luminaire est fourni avec un bloc-batterie d'éclairage de secours installé en usine.*

Basic Tilt Adjustment Information

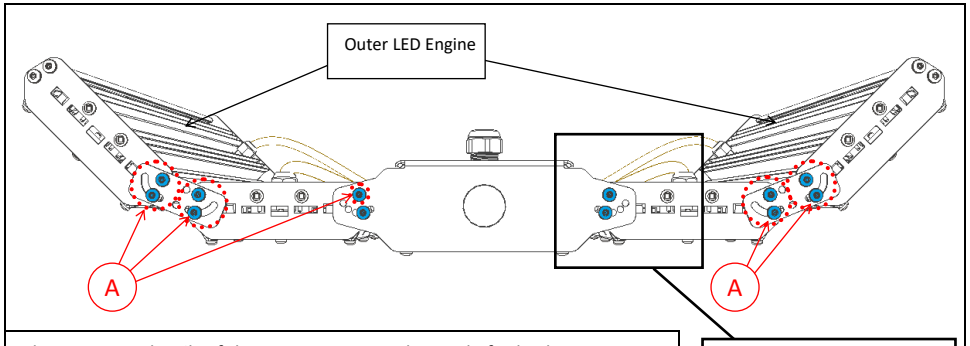

Adjustment to the tilt of the LED Engines can be made for both SOL-G2-Dxxx/Qxxxx models. Fasteners for adjustments are present on both front and back sides of the fixture.

Fasteners (see point A) attached to the links only need to be loosened and re-tightened for tilting adjustments.

Specific fasteners (see point B) may require removing and replacing for tilting adjustments. This is only the case for adjustments of the inner LED engines' tilt angle.

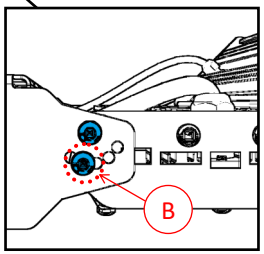

Wiring Instructions

Wiring from LED Driver to AC Supply, or LED Driver Terminal Block Colouring		AC/Line Supply Connection (Black)
		AC/Neutral Connection (White)
		Earth Ground Connection (Green)
Wiring for 0-10V Dimming, from Separate Cord		Dim + Connection (Violet/as Labeled)
		Dim – Connection (Gray/as Labeled)
(*If applicable*) Wiring from Emergency Driver to LED Driver		AC/Line Supply Connection (as Labeled)
		AC/Neutral Connection (White)

- **System Wiring Diagram for Emergency LED Driver:**

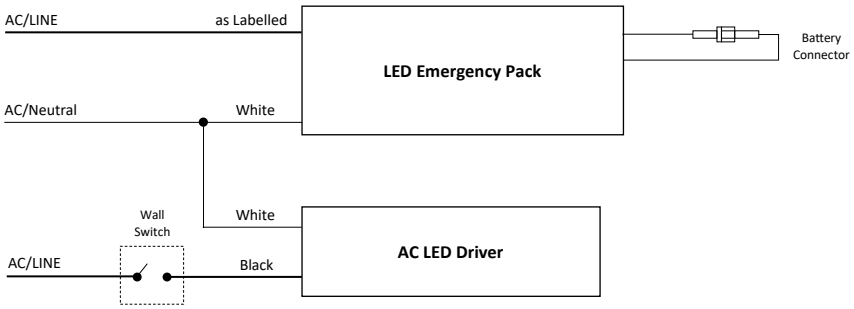

Note: Emergency driver and AC driver must be fed from the same branch circuit.

Suspension Kit Installation

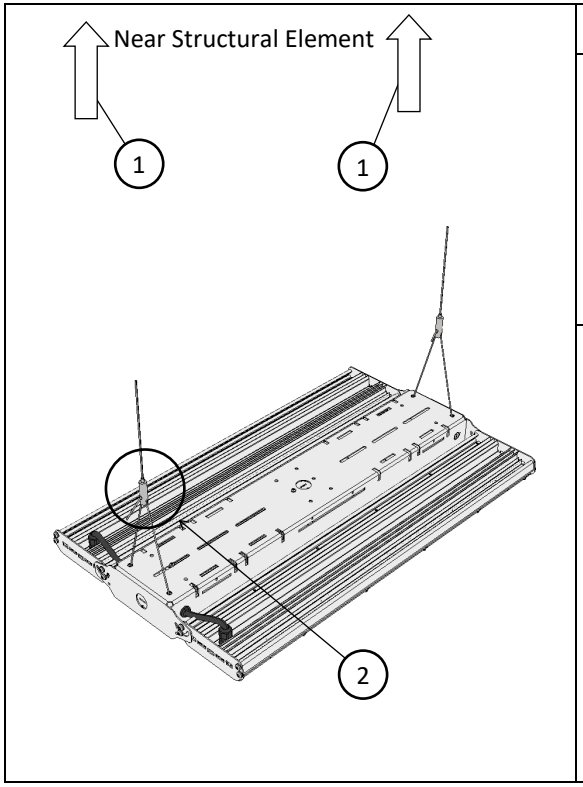

1 Loop around appropriate structural element.

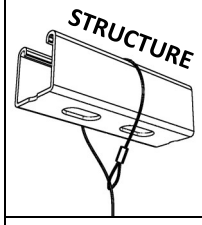

2

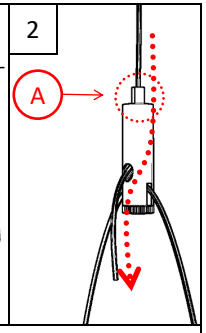

Supplied Hardware:

- Cable to loop around structure
- Gripper Assembly, pre-assembled to luminaire

Slide the Cable through the top of the Gripper Assembly. Gripper allows cable to move in one direction only.

To slide cable in opposite direction, hold down the top of Gripper (see point A). Once adjustment is complete, release the top of the Gripper. The Gripper will secure then secure the Cable from slipping out.

Tie up and secure the excess cable.

Part of the suspension kit is assembled into the luminaire. However, if for some reason the suspension kit not completely assembled into the fixture. Follow the following procedure to reattach the cable into the luminaire.

Please, do not disassemble the cable gripper assembly. Critical components may dislodge from their normal position and may cause the gripper assembly to be faulty.
For all other issues regarding installation of the suspension kit, please contact Lumingen Technologies

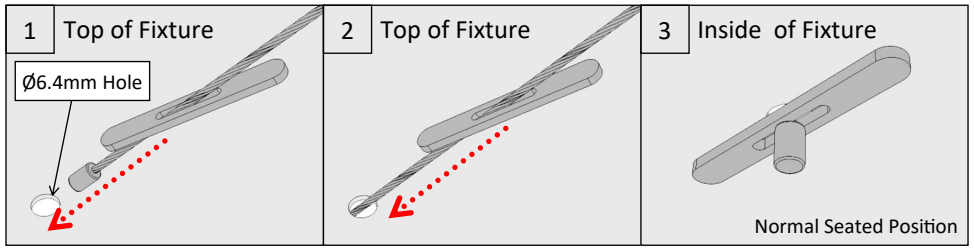

Ensure all metal conduit plugs are in-place in unused openings.

Pendant Kit (Pendant Stem) Installation

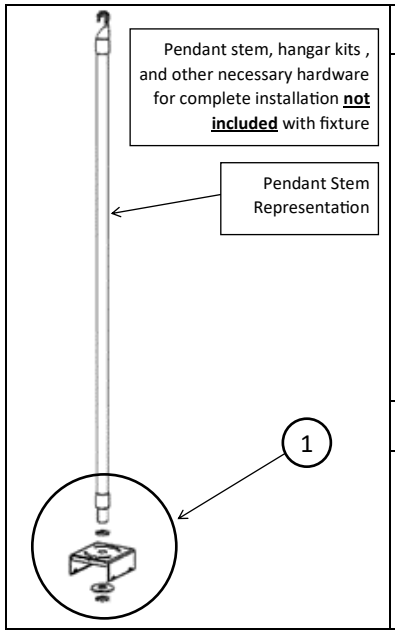

1

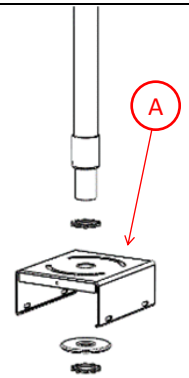

Supplied Hardware:

- Main Kit Bracket (see point A)
- 2 x Side Covers (to close Main Kit Bracket Openings)

Main Bracket may be adapted to pendant stems using a combination of lock washers, or an eye-bolt.
Additional cable kits can be used to further secure the fixture.

2

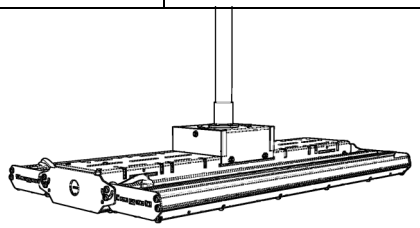

The Main Bracket should hook into the slot on both sides at the center of the fixture (see point B). Align and secure the bracket to the fixture with the four provided screws (see point C) at both sides of the bracket.

Wiring may be completed within the bracket enclosure. Enclose the bracket with both side covers and the supplied screws (see point D) to cover the wiring compartment.

Ensure all metal conduit plugs are in-place in unused openings.

3

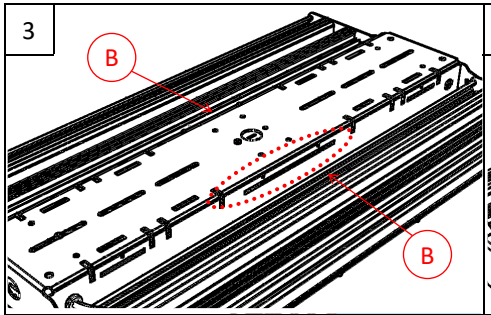

4

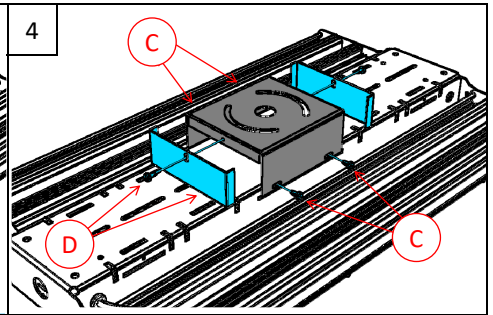

4a

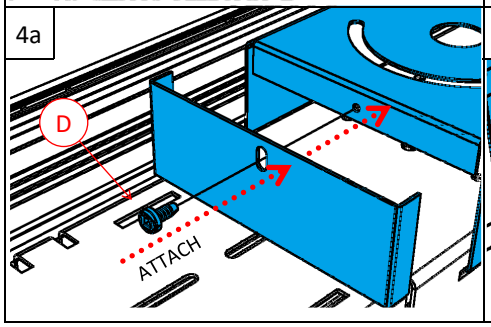

4b

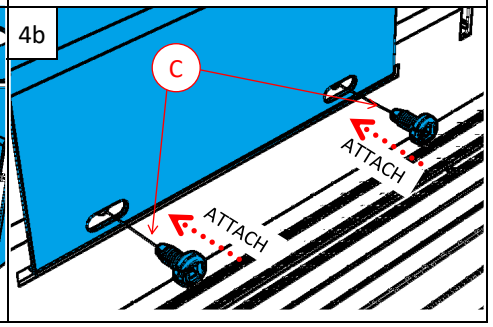

Pendant Kit (over Junction Box) Installation

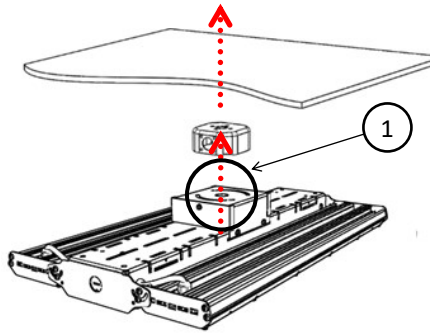

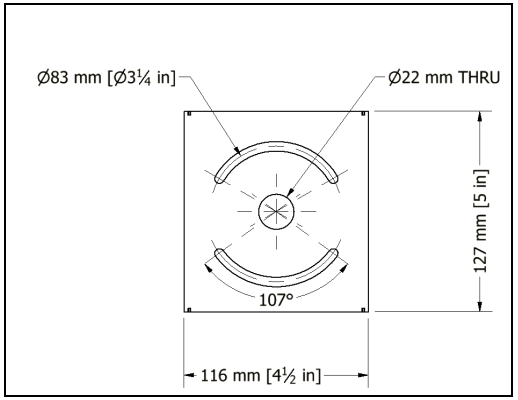

Supplied Hardware:

- Main Kit Bracket
- 2 x Side Covers (to close Main Kit Bracket Openings)

Pendant kit may also attach over existing junction boxes, provided that the junction boxes are suitable for this use. The slot pattern is as shown on right. This kit may be used for surface mounted installation, where applicable.

The Main Bracket should hook into the slot on both sides at the center of the fixture (see point B). Align and secure the bracket to the fixture with the four provided screws (see point C) at both sides of the bracket.

Wiring may be completed within the bracket enclosure. Enclose the bracket with both side covers and the supplied screws (see point D) to cover the wiring compartment.

Ensure all metal conduit plugs are in-place in unused openings.

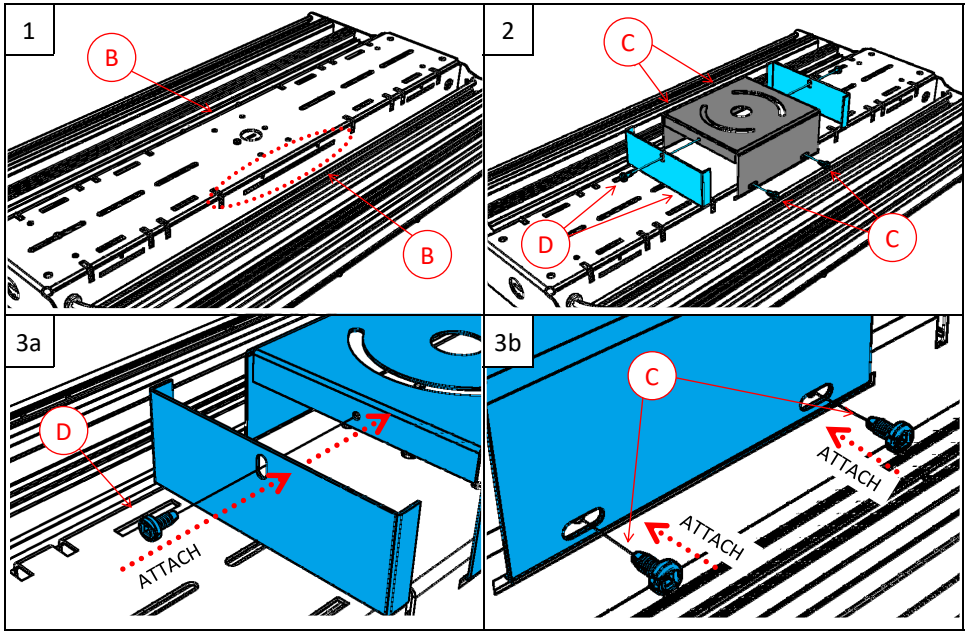

Surface Mount Kit Installation

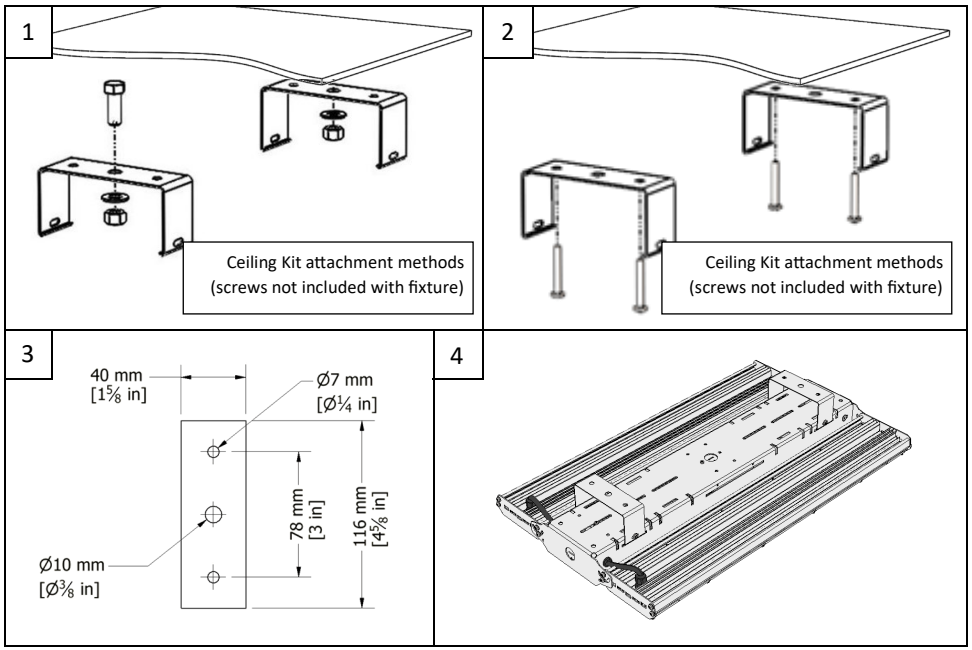

Attach the ceiling brackets to the installation surface.

The Ceiling Bracket should hook into the slot on both sides at the ends of the fixture (see point A). Align and secure the brackets to the fixture with the four provided screws (see point B) at both sides of each bracket.

Ensure all metal conduit plugs are in-place in unused openings.

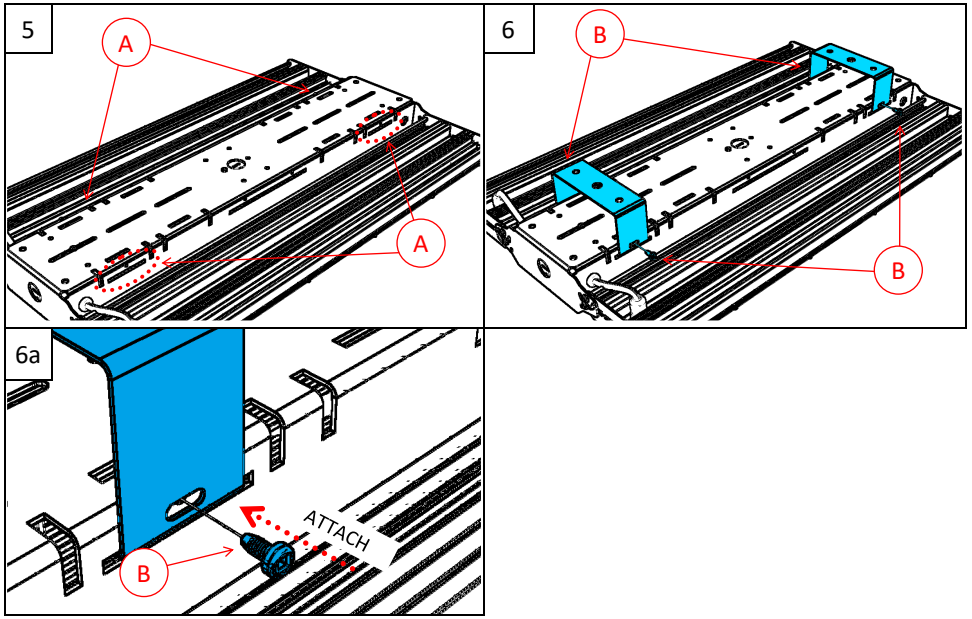

Multifunctional Occupancy Sensor Assembly

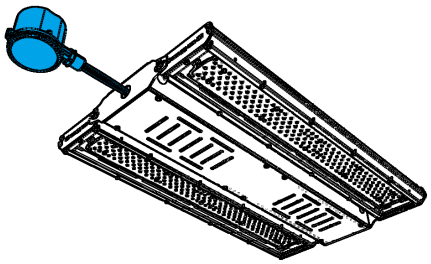

Minimal assembly is required to install the motion sensor into the fixture.

1

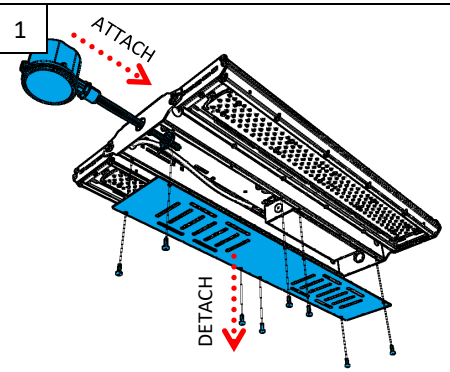

2

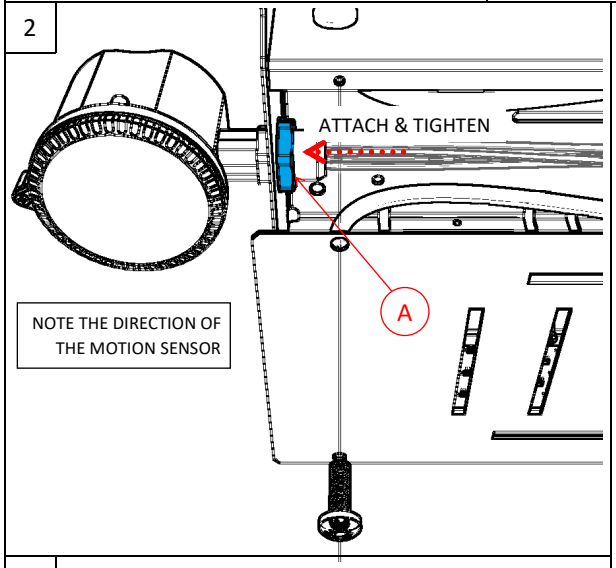

NOTE THE DIRECTION OF THE MOTION SENSOR

3

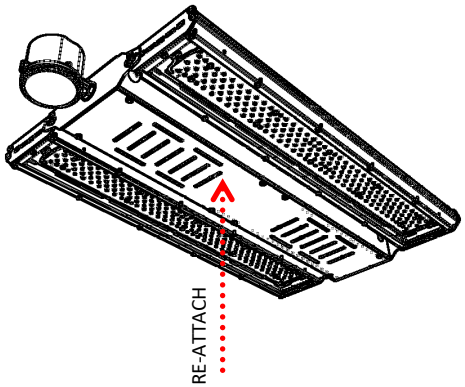

No additional wiring to install the motion sensor is necessary, but the motion sensor needs to be mechanically secured onto fixture after removal from the packaging and prior to the final installation and wiring the fixture to AC mains.

Step 1. The motion sensor is secured to the fixture housing by a lock nut (hardware provided, see point A). To access this area, remove the access cover by removing the fasteners.

Position the motion sensor so that the motion sensor lens is pointing downward.

Step 2. Tighten the lock nut (see point A) just enough that the motion sensor does not move/rotate easily.

Step 3. To finalize the assembly, the access cover can be replaced into its original position.

Final installation and, subsequently, wiring to AC mains can now begin.

Cut-Off Visor Assembly and Adjustment

1

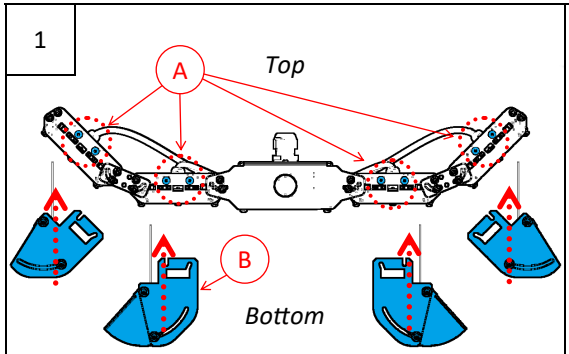

Visor needs to be installed into the fixture. This assembly may be done before or after final installation depending on the need.

Provided Hardware:
4x #8 Sheet Metal Screw (per Visor set, already attached to fixture), (see point A)
1x Visor Assembly per LED Engine (or custom amount), see (point B)

Tilt LED modules and adjust the Visor Assembly for the desired cut-off effect.

2

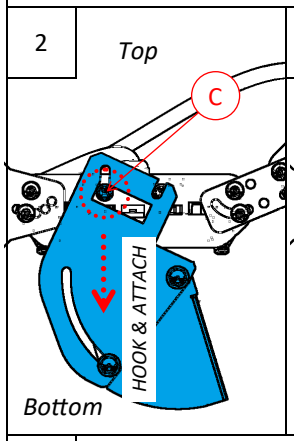

3

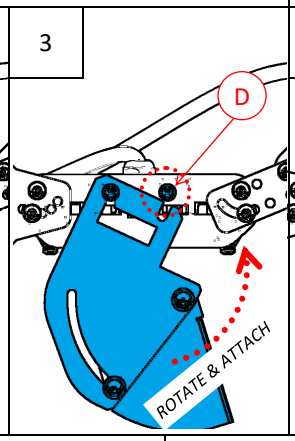

4

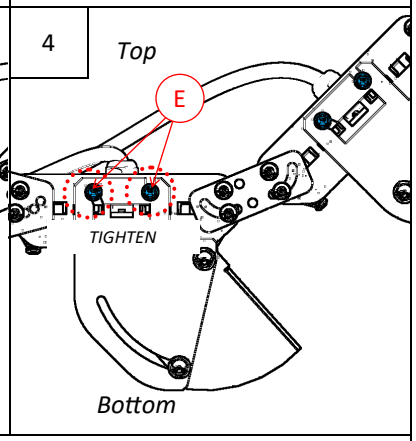

5

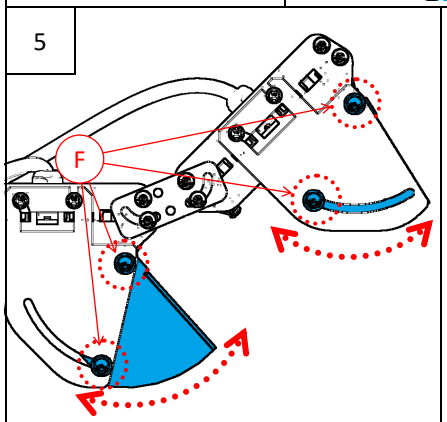

Example Aiming Direction

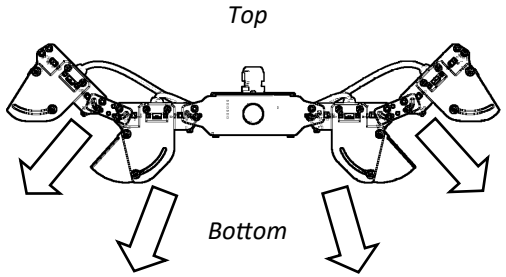

Step 1. Locate the screws on the LED engines that are used to mount the visor. 4x per LED engine (see point A). Loosen all screws (see point A). These screws are located on the front and back side of the fixture.
Step 2. Pull the visor over the screws. The slot will fit over screw shaft (see point C). Small amount of force may be necessary, but take care to not permanently distort the part.
Step 3. Rotate the visor over the other set of screws. The respective slot (see point D) will fit smoothly over the screw shaft.
Step 4. Tighten all (4x per LED engine) to secure the visor assembly (see point E)
Step 5. Adjust the tilt of the engine and the visor assembly. To adjust the visor assembly, loosen (do not remove) the acorn nuts (see point F). Re-tighten when the desired cut-off effect is set.